ASSEMBLY INSTRUCTION

VISTORIA WANDBOARD: 1600 X 180 X 180 MM

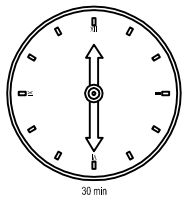

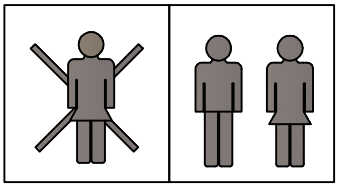

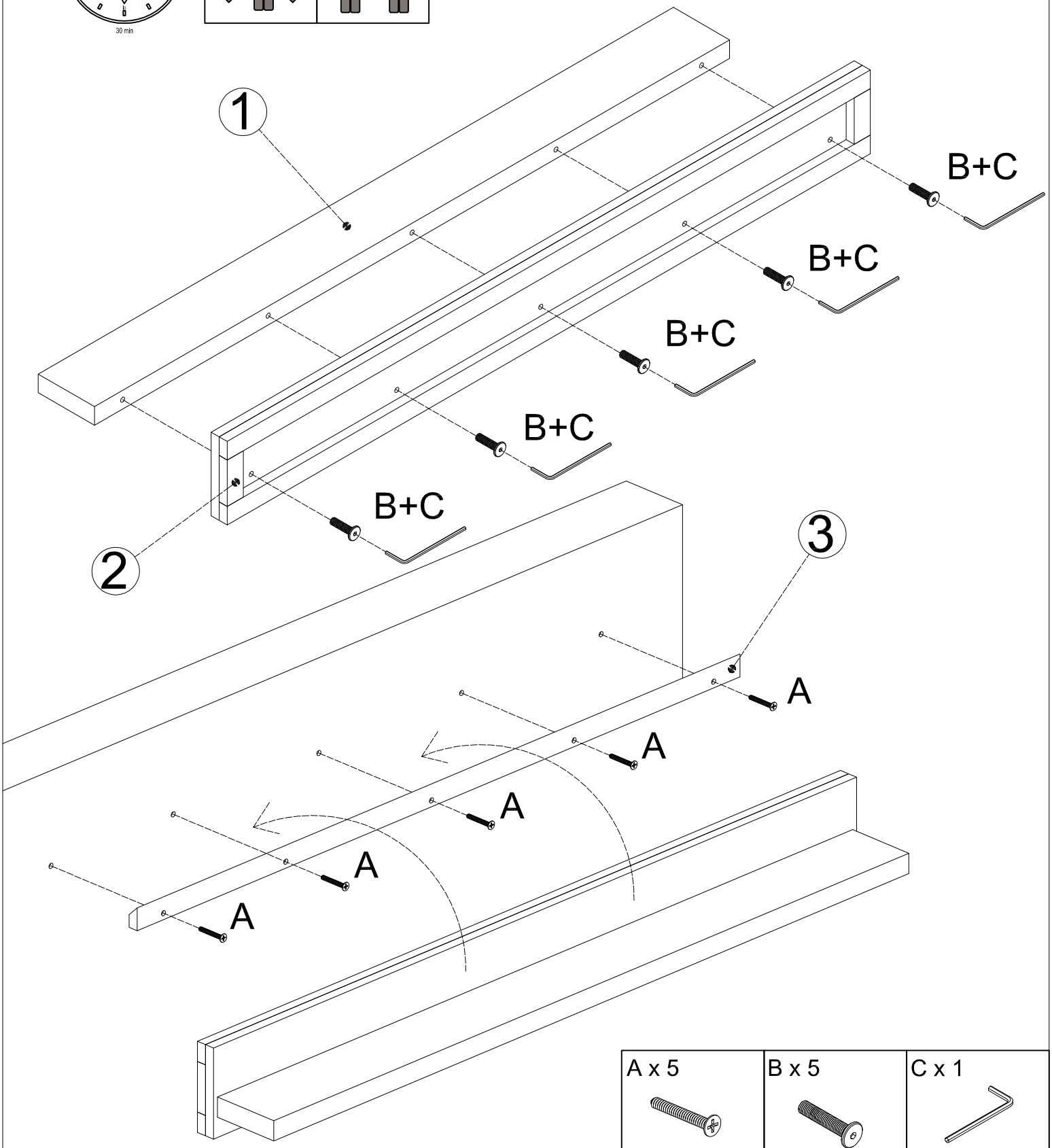

A x 5	B x 5	C x 1
Ø4 x L40 mm	Ø6 x L50 mm	4 x L50 mm